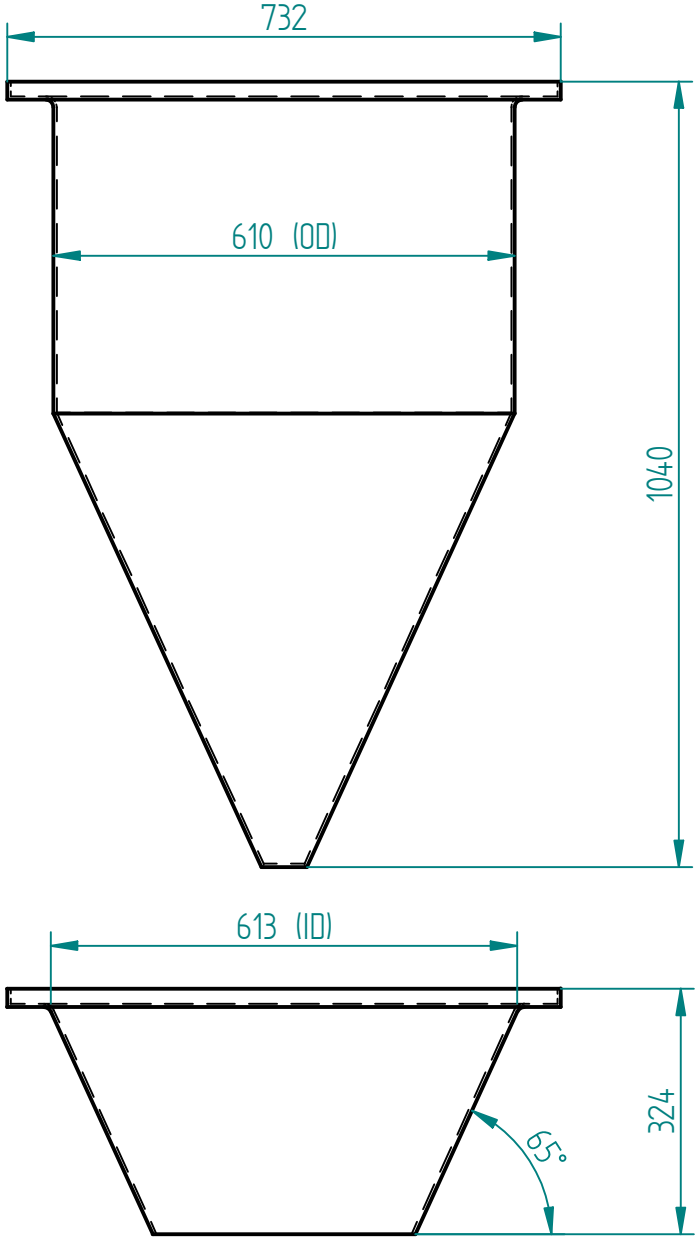

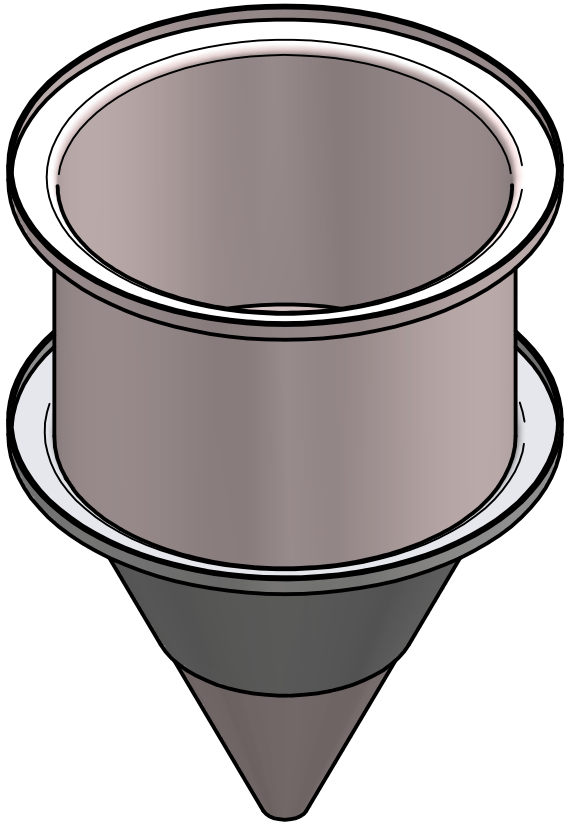

REV	DESCRIPTION	DATE	APPROVED

REVISION HISTORY

INDAC

INNOVATIVE DESIGN AND CONSTRUCTION

Box 378
26 Stuart Street
Blenheim, N.Z.
www.indac.co.nz

Phone: +64 3 578 3034
Fax: +64 3 578 2032
Aust.Ph.: 1800 553 055
www.plasticproducts.co.nz

TITLE: WCT165

COPYRIGHT RESERVED		SCALE	DRAWN	Markus	CHECKED		SIZE
FILE NAME:	WCT165 Drawing.dft	1 : 10	DATE	10.20.10	DATE	10/05/17	A4

DWG NO		SHEET 1 OF 1	REV	